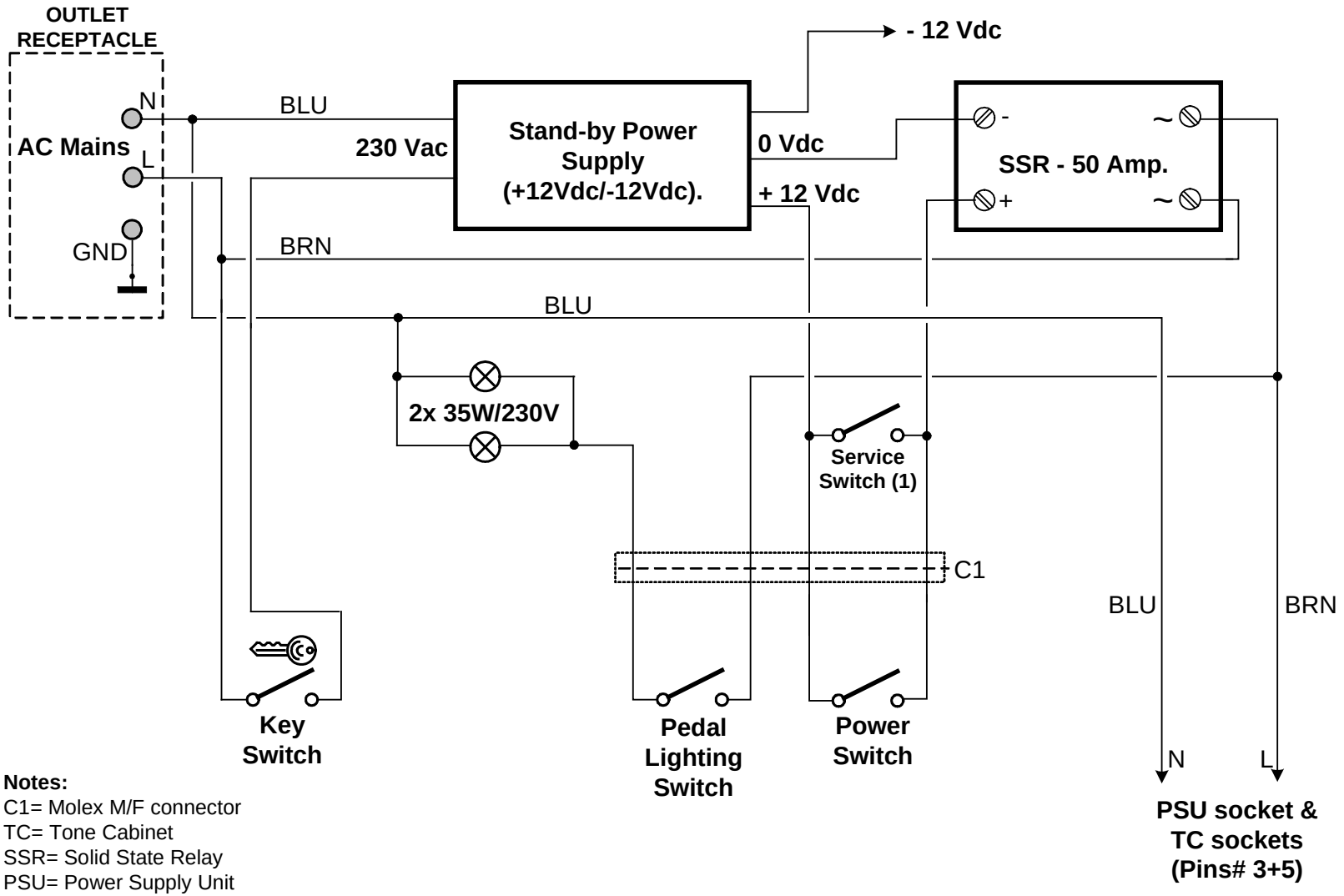

Notes:
C1= Molex M/F connector
TC= Tone Cabinet
SSR= Solid State Relay
PSU= Power Supply Unit
(1) Service Switch must be always on OFF position during normal operation.

AC Mains Power Distribution