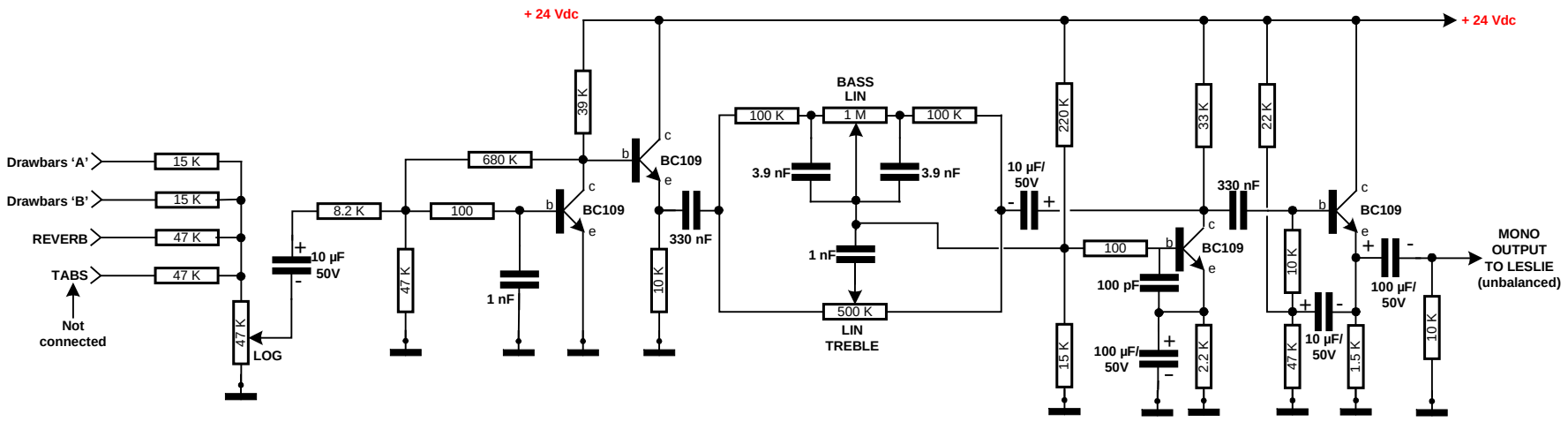

MONOPHONIC MIXER/PREAMP FOR LESLIE